45° SKEW VARIABLE BRIDGE WIDTH 2:1 FILL SLOPES
WINGS SKEWED 25% FROM ROADWAY TO BREASTWALL

ABUTMENT SKEW CORRECTION FACTOR (SCF) = 1.414

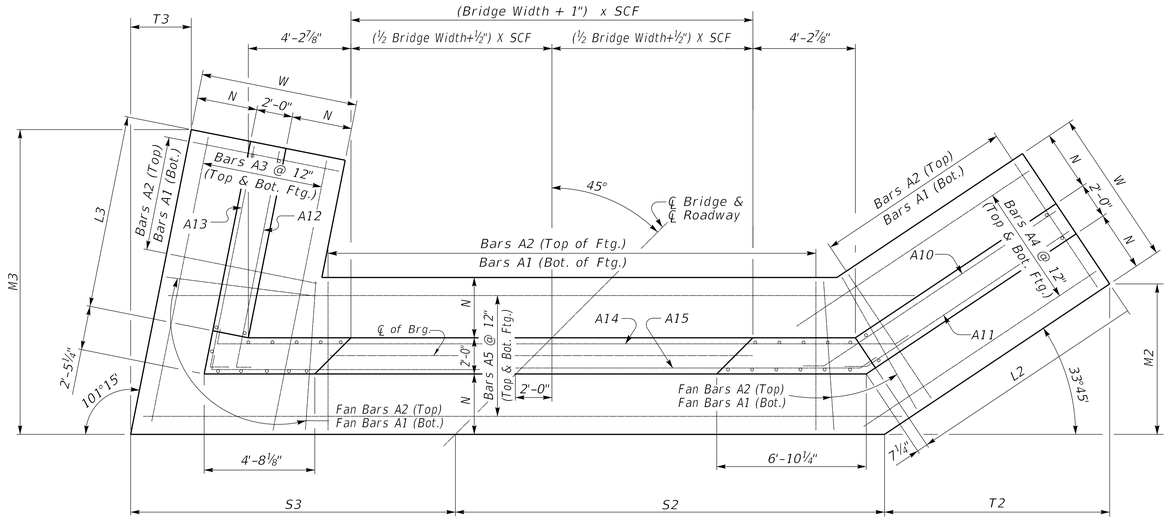

(Left Skew as shown;right skew opp. hand)

PLAN

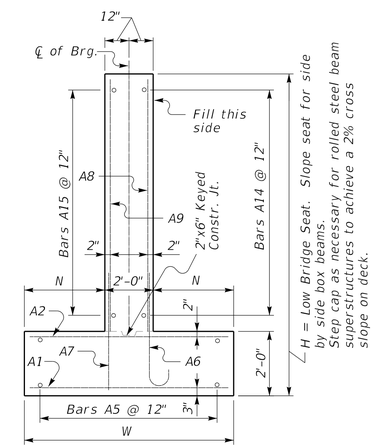

WALL SECTION

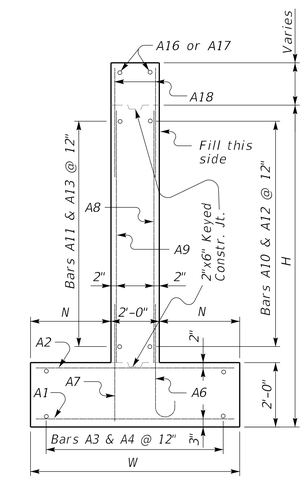

WING SECTION

NOTE: Trim A16 & A17 bars if necessary
Trim A3 bars as necessary

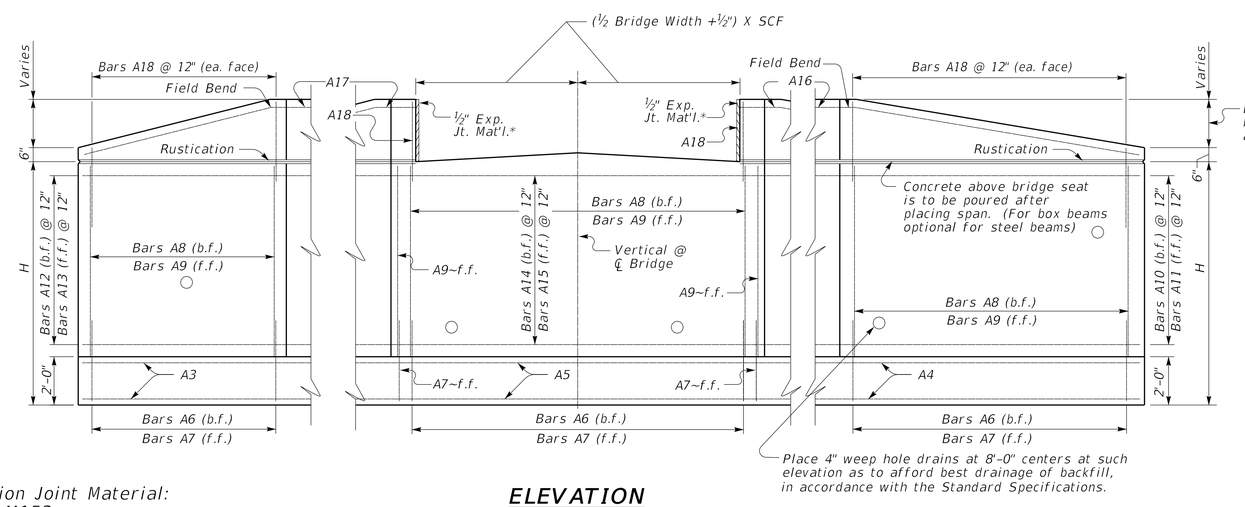

*Expansion Joint Material:
AASHTO M153
Type-I Sponge Rubber

ELEVATION

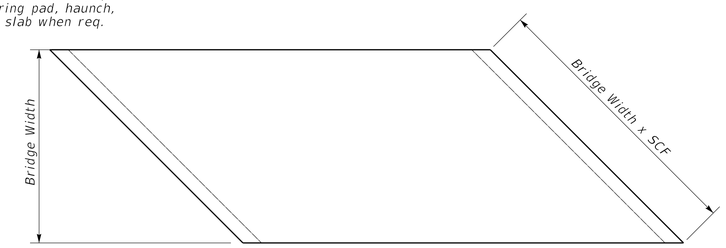

PLAN OF SUPERSTRUCTURE SLAB

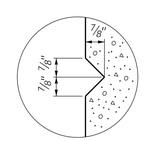

RUSTICATION GROOVE

REVISION DATE: 08/11/2025
REVISION NUMBER: 0

SUBMITTED 08-11-2025 DATE
DIVISION DIRECTOR

APPROVED 08-11-2025 DATE
STATE HIGHWAY ENGINEER

BRIDGE STANDARDS

COMMONWEALTH OF KENTUCKY
DEPARTMENT OF HIGHWAYS

45° SKEW SUPPORT VARIABLE WIDTH ABUTMENT 25% SKEWED WINGS

STANDARD DRAWING NUMBER
BSA-039-01

OpenRoads Designer v23.00.01.11